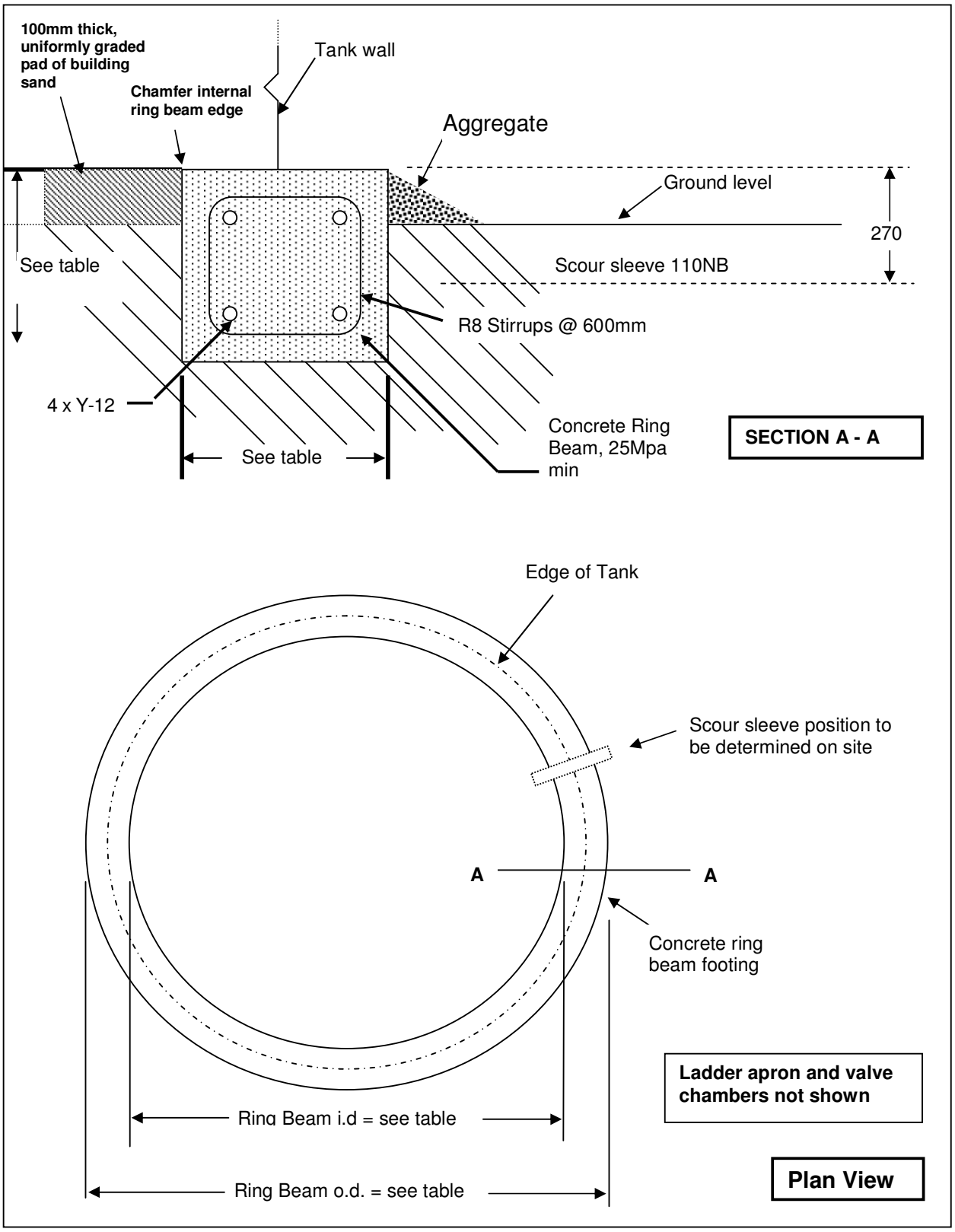Generalised Ring Beam Sketch for GALAXY Reservoir